# CORE COLLECTION

Product fact sheet

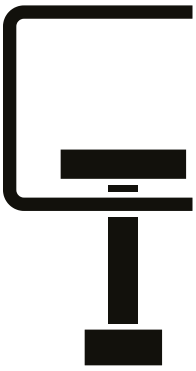

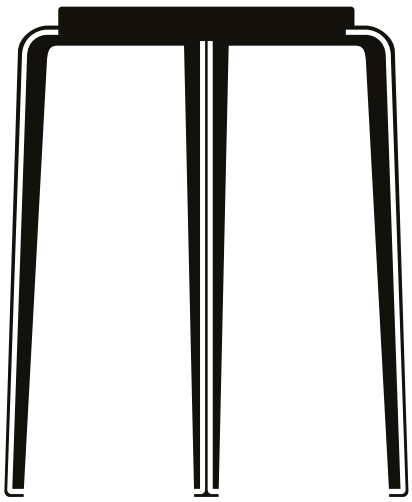

# CORE COLLECTION - Product fact sheet

## Table leg - H 43cm & H 75cm

Brushed stainless steel

1 Kg
2,5 Kg

## LOU stool

Leg finish

Seat finish

4,5 Kg

Delivered flat pack - stackable up to 6

## Bracket

Brushed stainless steel

0,5 Kg

## Bracket - Wall shelf

Brushed stainless steel

Shelf

sizes : 32x27 / 45x20 / 60x20 / 90x20 / 120x20 / 150x20 cm
weight : 2,4 Kg / 2,5 Kg / 3,7 Kg / 4,9 Kg / 5,9 Kg / 6,9 Kg

# CORE COLLECTION - Product fact sheet

## PLI-shelf 20 / 30 / 45 / 60cm

Brushed stainless steel

Maximum load : 15kg per shelf
Screws and wall anchors supplied

## PLI-slim shelf 20 / 30 / 45 / 60cm

Brushed stainless steel

Maximum load : 10kg per shelf
Screws and wall anchors supplied

## PLI-hook 20 / 30 / 45 / 60cm

Brushed stainless steel

Add on for PLI-shelf & PLI-slim shelf
Maximum load : 10kg per module

## Finish

Brushed stainless steel

Natural solid oakwood

Tinted solid oakwood

Solid reclaimed wood

## Product specifications

| | |
|---|---|
| Materials | Brushed stainless steel, FSC eco-certifed solid oak, reclaimed wood |
| Manufacturing | 100% made in Europe (Lithuania, Croatia, France) |

## Care and maintenance

Brushed stainless steel is durable and elegant, but requires regular care to maintain its appearance. Clean the surface with a soft, clean cloth slightly dampened with lukewarm water and a mild detergent, then dry immediately with a dry cloth to avoid marks.
Avoid abrasive products, solvents, alcohol or rough sponges, which may scratch or dull the metal. To remove fingerprints or limescale, use a soft cloth lightly moistened with vinegar water or a cleaner specifically designed for stainless steel.

# CORE COLLECTION - Product fact sheet

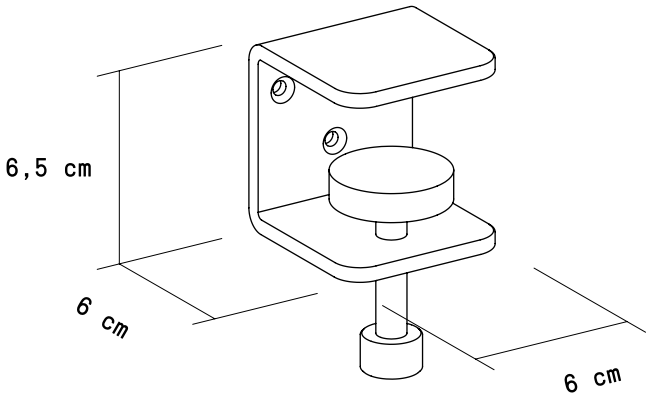


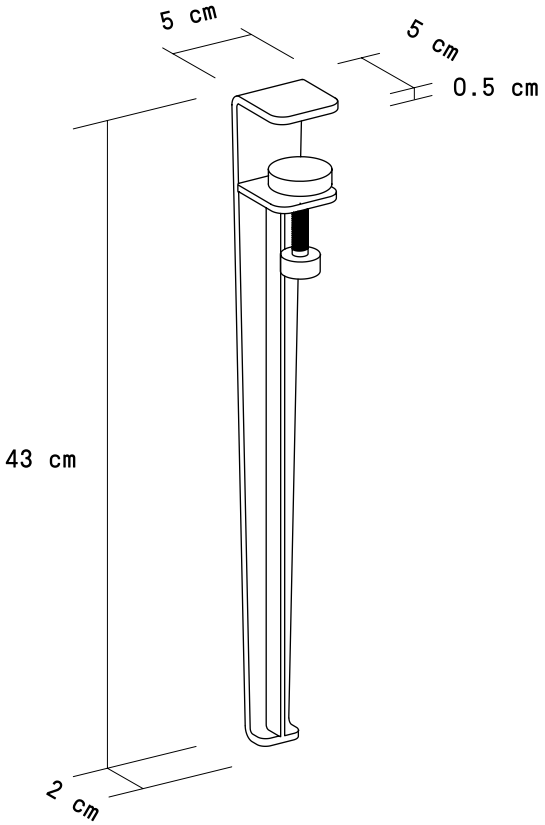


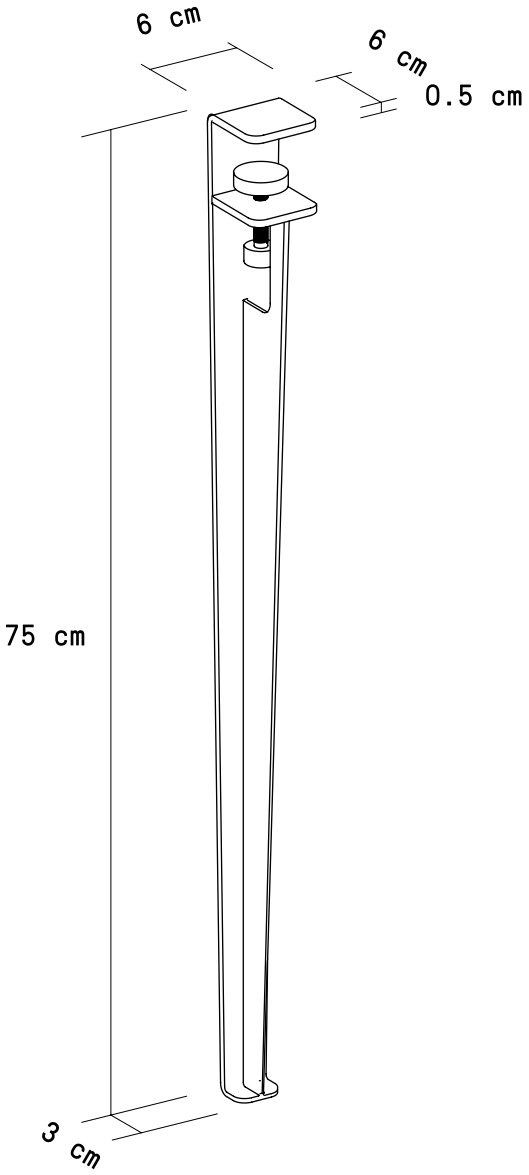

# CORE COLLECTION - Product fact sheet

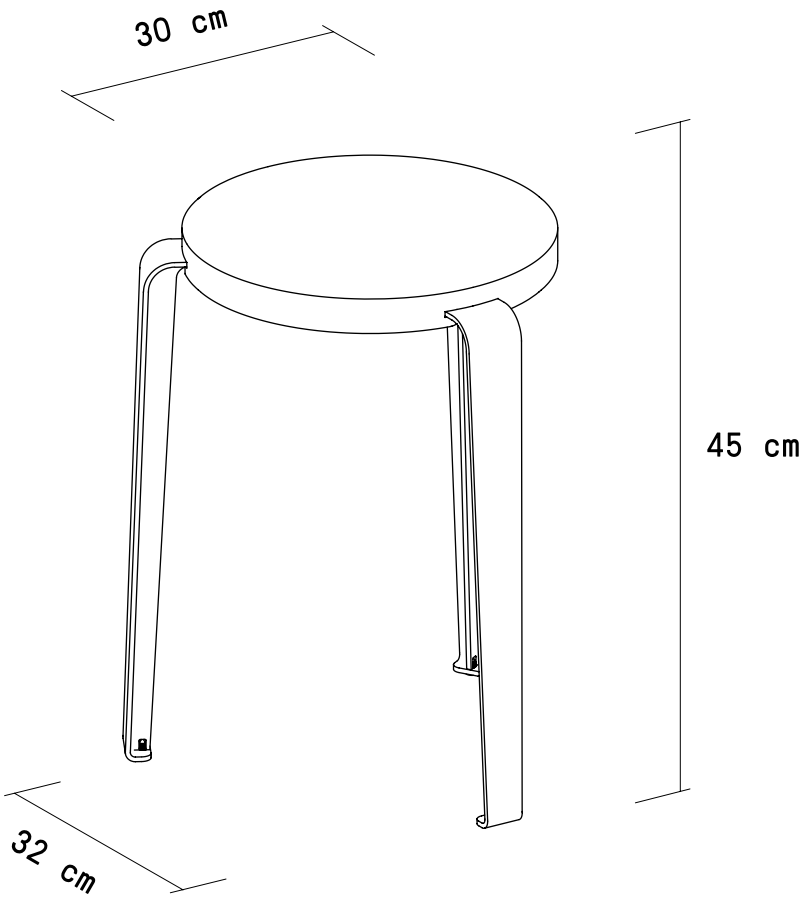

# CORE COLLECTION - Product fact sheet

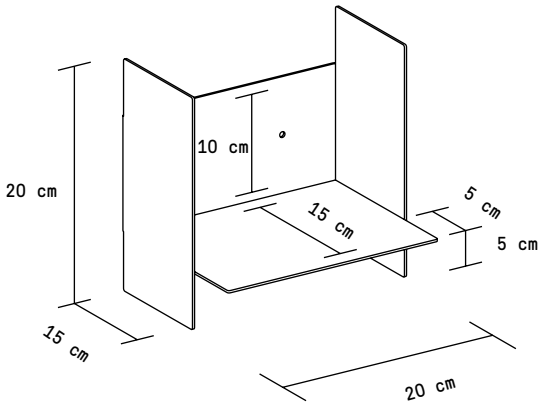


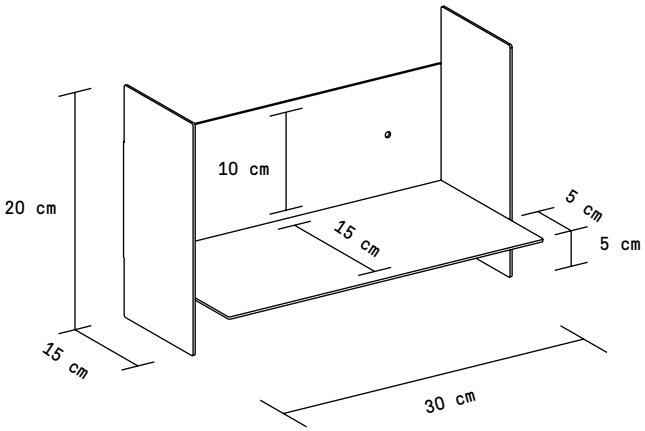


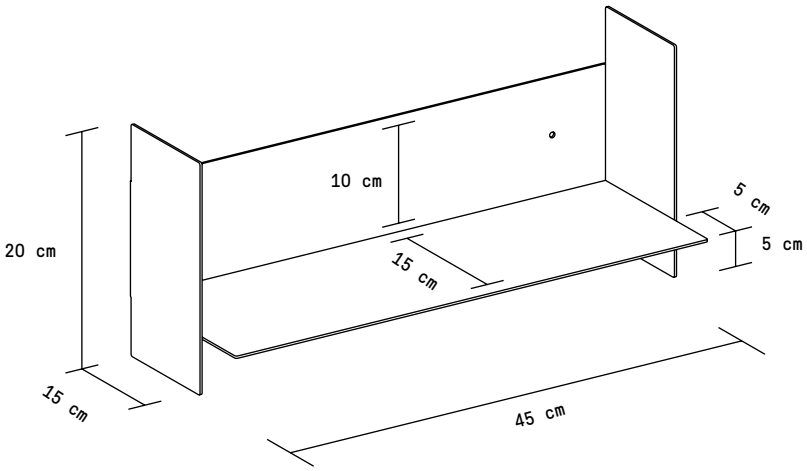


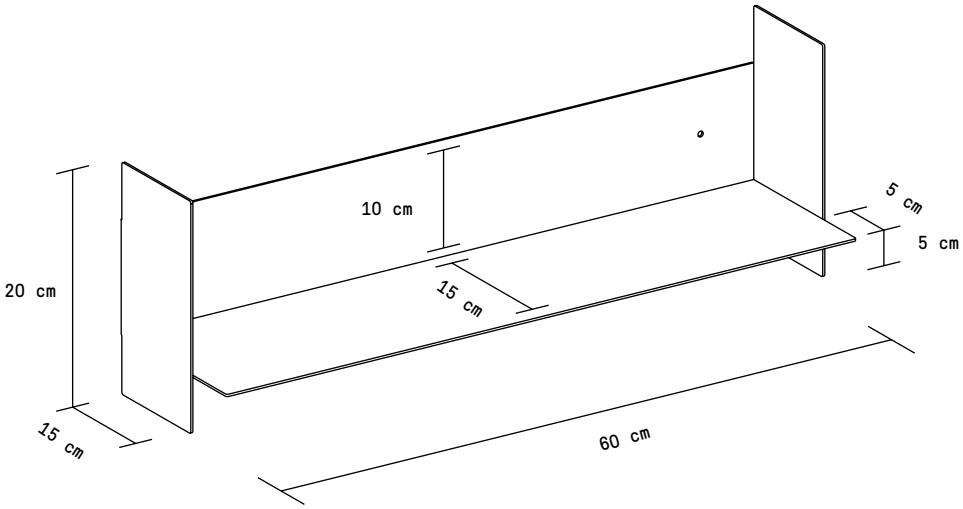

# CORE COLLECTION - Product fact sheet

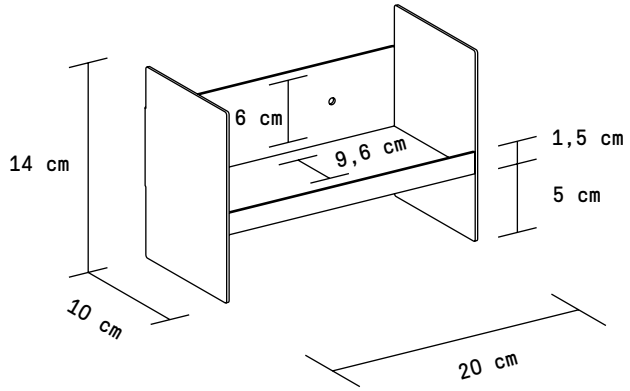


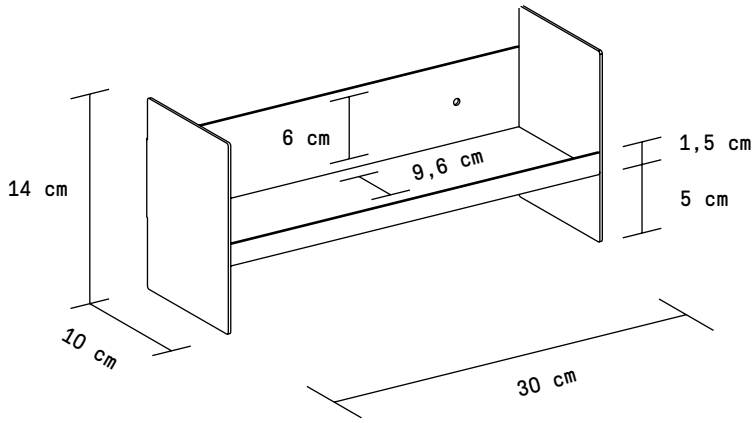


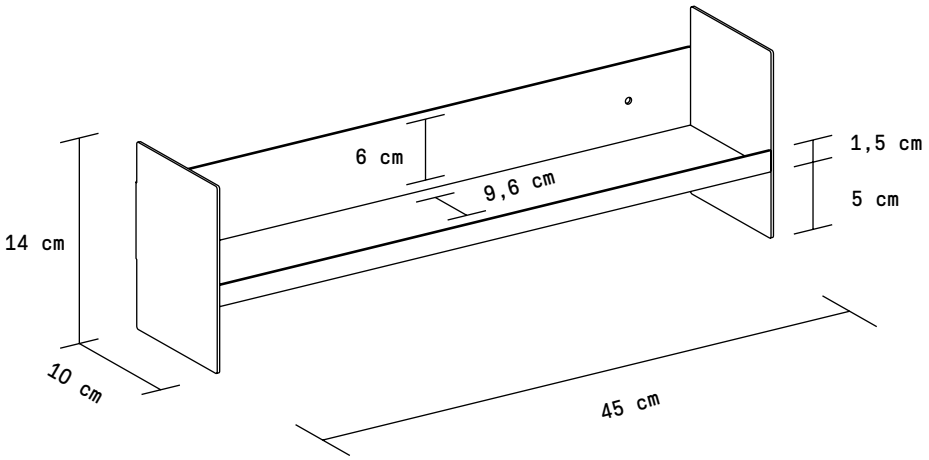


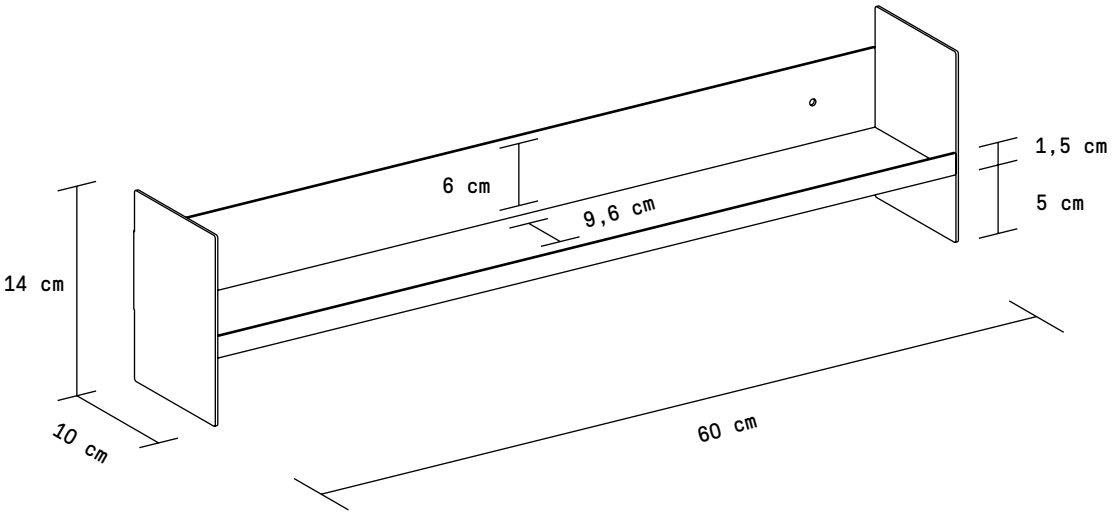
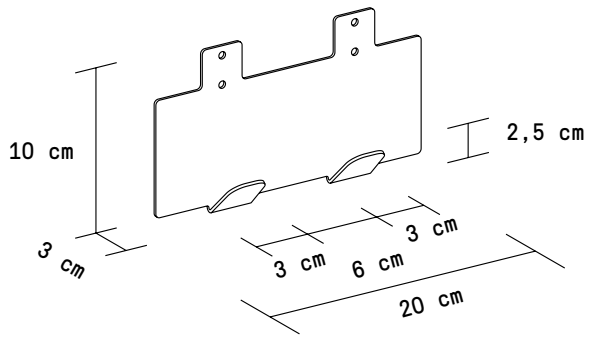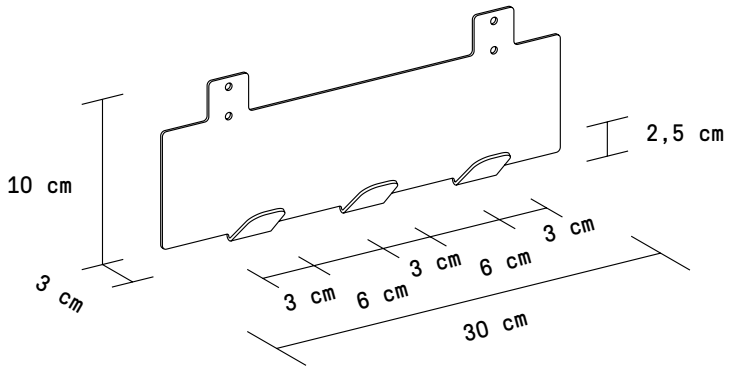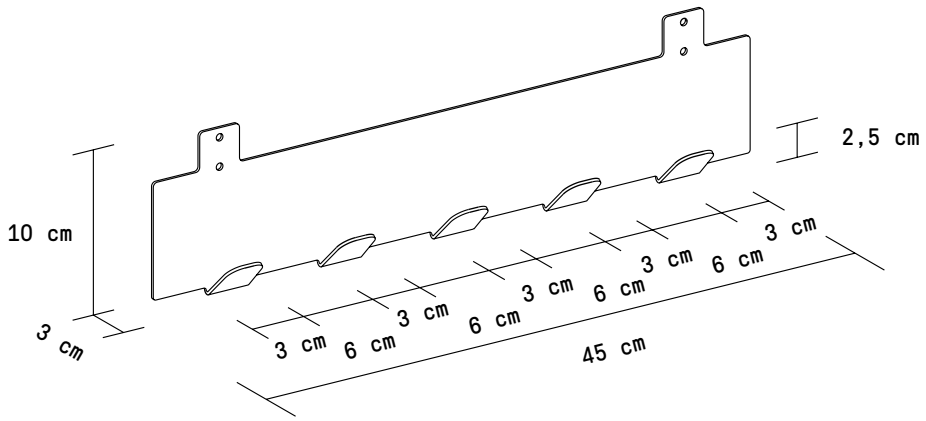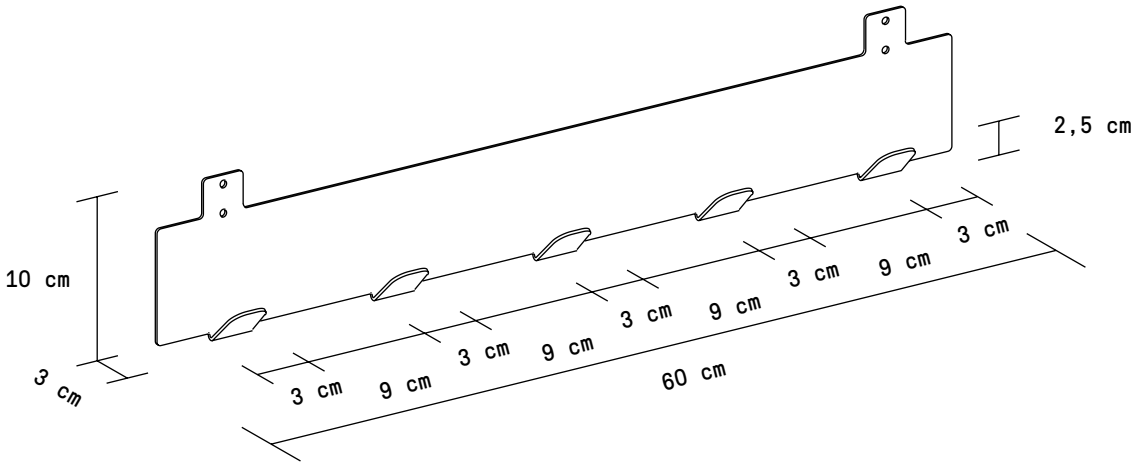
# CORE COLLECTION - Product fact sheet